Roadway Structure Cross-Section

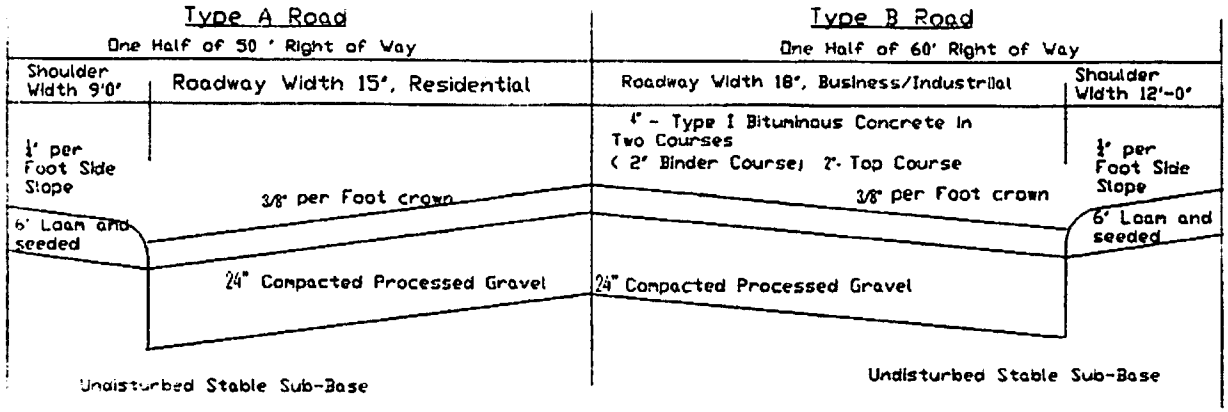

Roadway Cross-Section

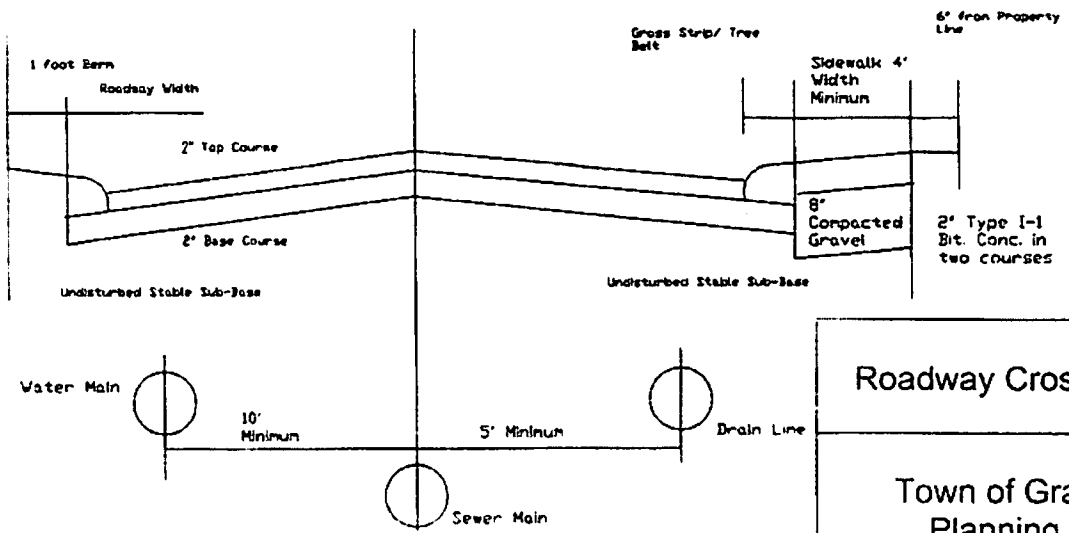

DO NOT COPY

Roadway Cross Sections

Town of Granby MA
Planning Board
March 2005

BITUMINOUS CONCRETE BERM

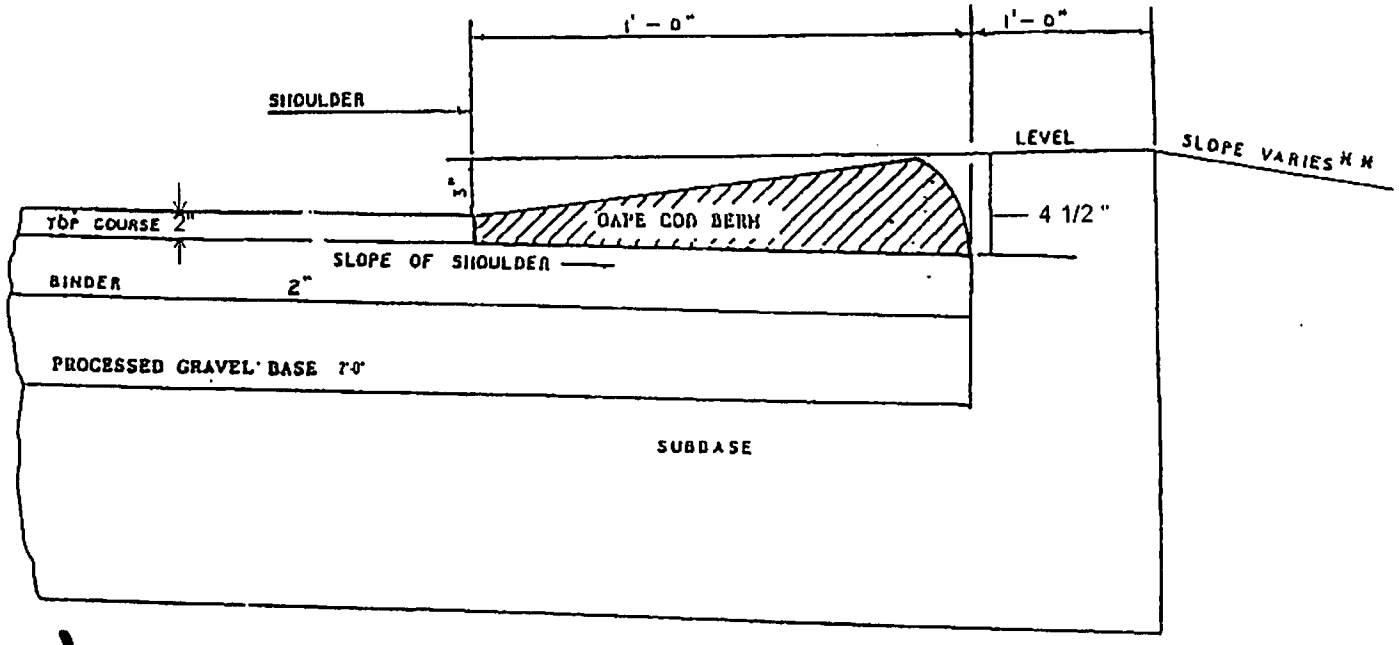

DO NOT COPY

Bituminous Concrete Berm

Town of Granby MA
Planning Board
March 2005

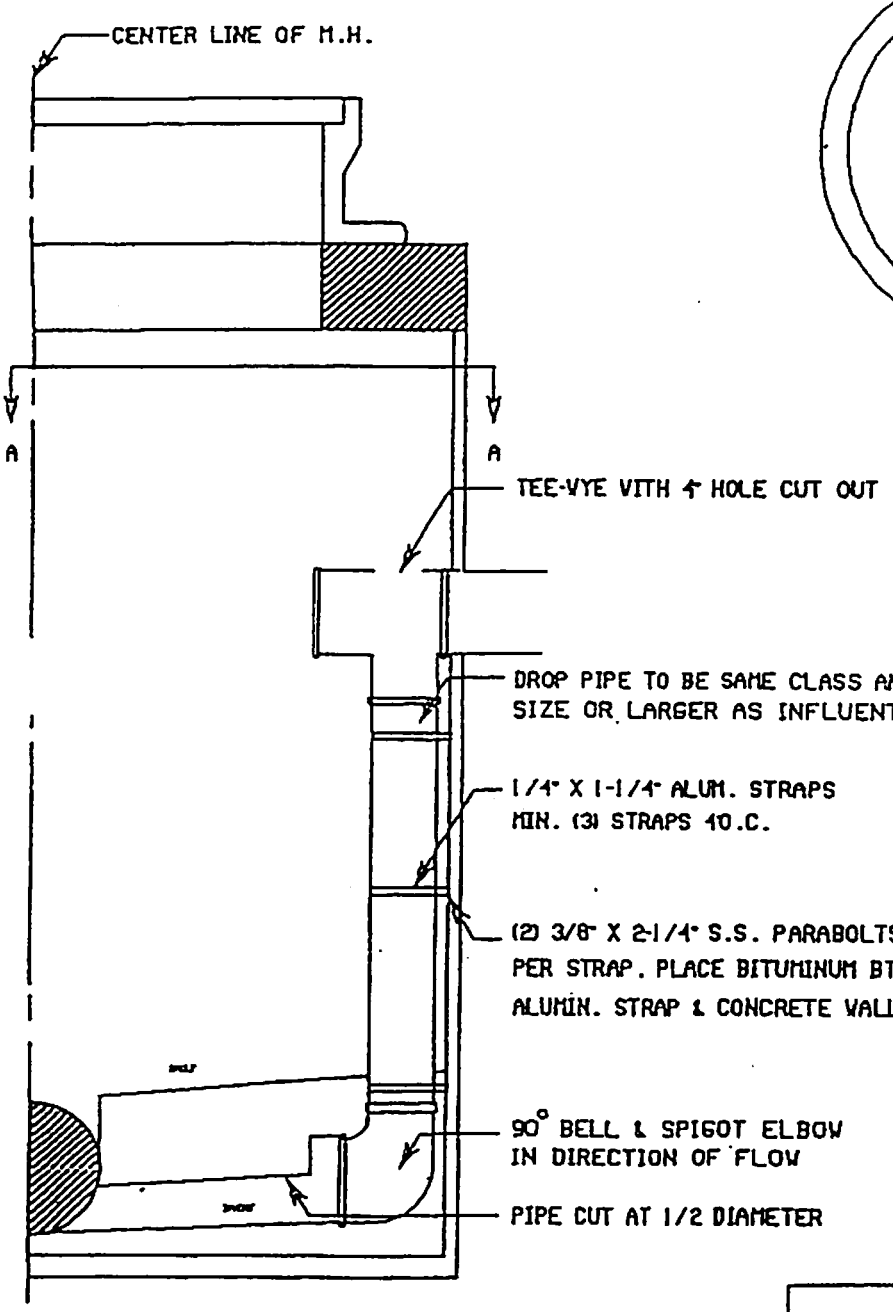

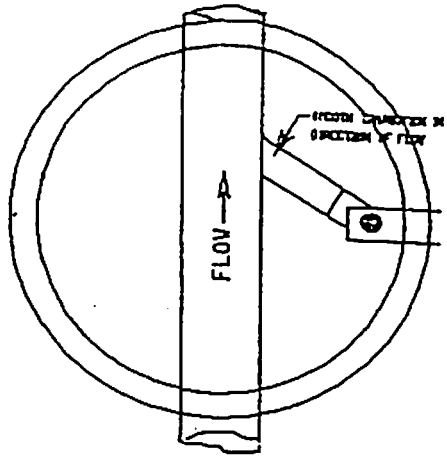

SECTION A-A

DO NOT COPY

Inside Drop Inlet

Town of Granby, MA
Planning Board
March 2005

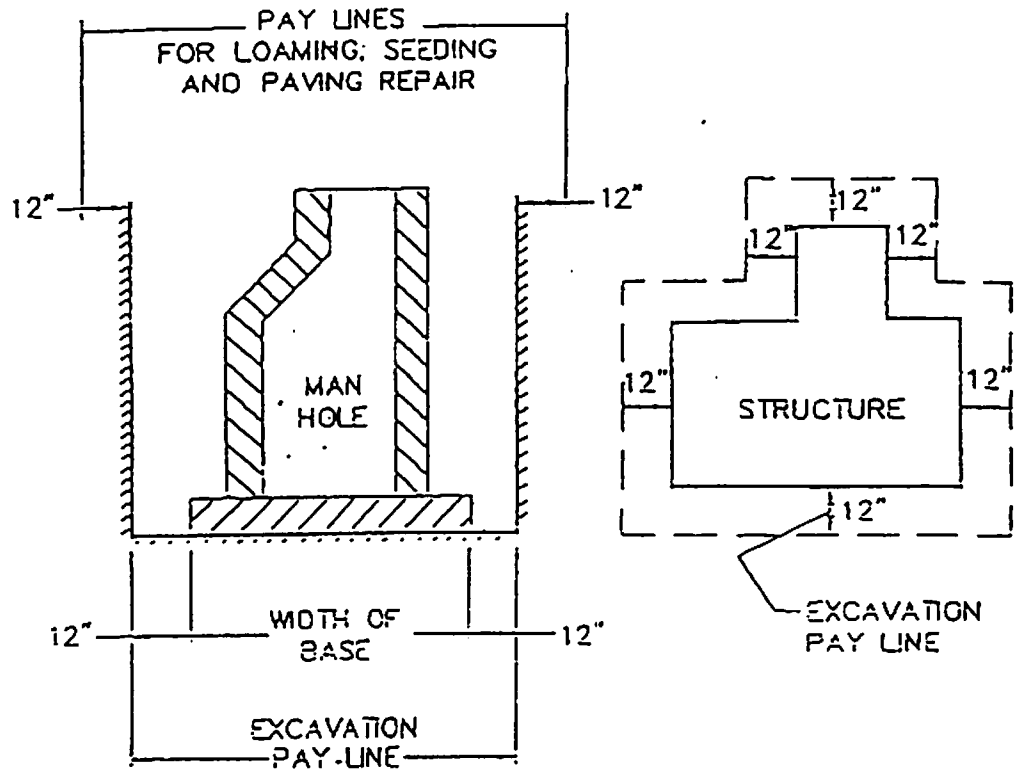

NOTE:

EXCAVATION WILL BE PAID FOR ONCE AND ONLY ONCE, REGARDLESS OF HOW OFTEN IT FALLS WITHIN THE PAYLINES FOR VARIOUS PIPES AND STRUCTURES DUE TO OVERLAPPING OF PAYLINES, AND REGARDLESS OF HOW OFTEN CONTRACTOR REHANDLES MATERIAL.

COPY DO NOT

Structure Pay Lines

Town of Granby, MA
Planning Board
March 2005

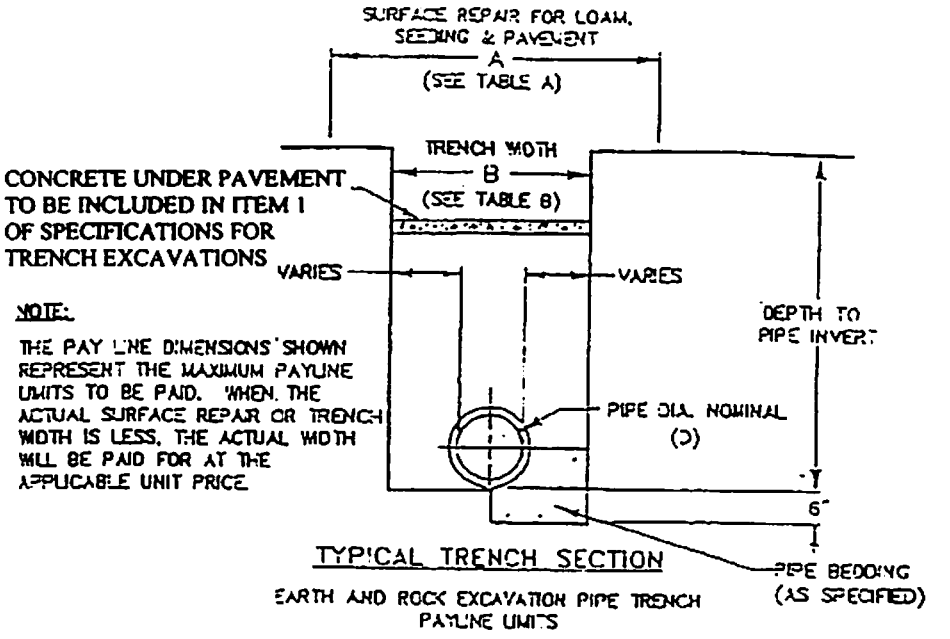

NOTE:

THE PAY LINE DIMENSIONS SHOWN REPRESENT THE MAXIMUM PAYLINE UNITS TO BE PAID. WHEN THE ACTUAL SURFACE REPAIR OR TRENCH WIDTH IS LESS, THE ACTUAL WIDTH WILL BE PAID FOR AT THE APPLICABLE UNIT PRICE.

TYPICAL TRENCH SECTION

EARTH AND ROCK EXCAVATION PIPE TRENCH PAYLINE UNITS

TABLE A SURFACE REPAIR PAY WIDTHS			
NOMINAL PIPE DIA. 0 – 24"		NOMINAL PIPE DIA. GREATER THAN 24"	
TEMPORARY PAVEMENT	PERMANENT PAVEMENT & LOAM & SEED	TEMPORARY PAVEMENT	PERMANENT PAVEMENT & LOAM & SEED
6'–6"	8'–6"	D + 4	D + 6

TABLE B EXCAVATION PAY WIDTHS AND ROCK EXCAVATION PAY WIDTHS	
NOMINAL PIPE DIA. 0–24"	NOMINAL PIPE DIA. GREATER THAN 24"
5'–0"	D + 3'–0"

NOTE:

1. PAVEMENT DEPTH FOR ROCK (AS DEFINED HEREIN) WHICH IS ENCOUNTERED IN A TRENCH SHALL BE NO LESS THAN THREE(3) FEET.

DO NOT COPY

Trench Pay Lines

Town of Granby, MA
Planning Board
March 2005

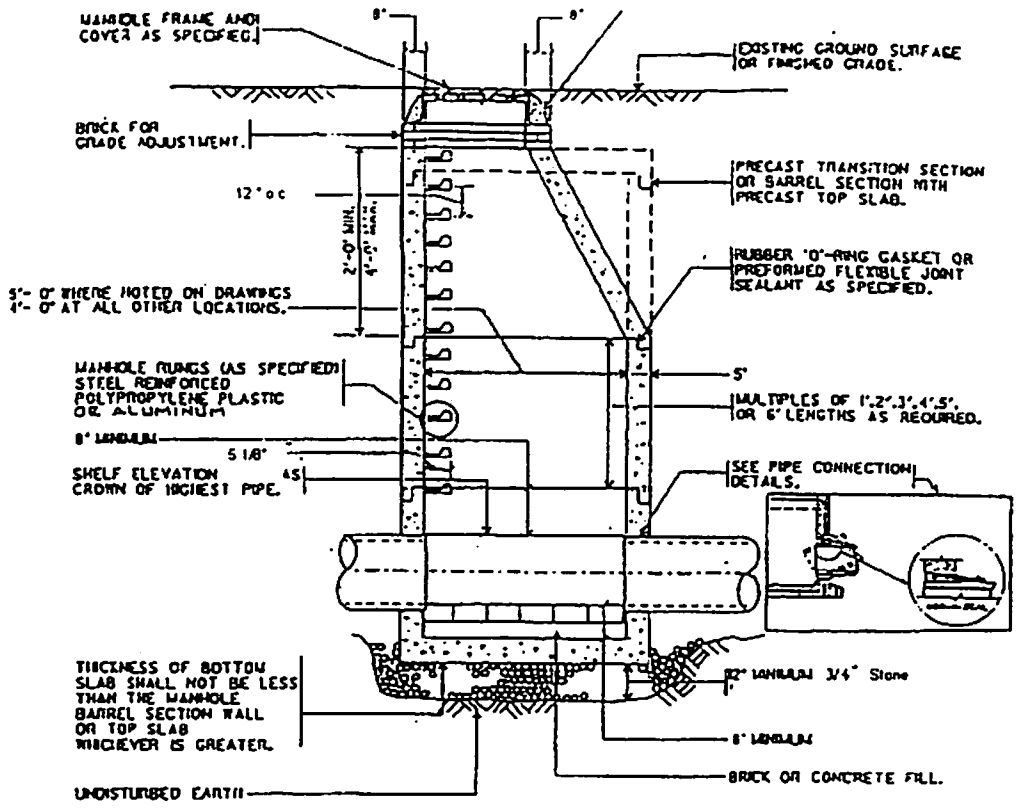

SECTION B-B

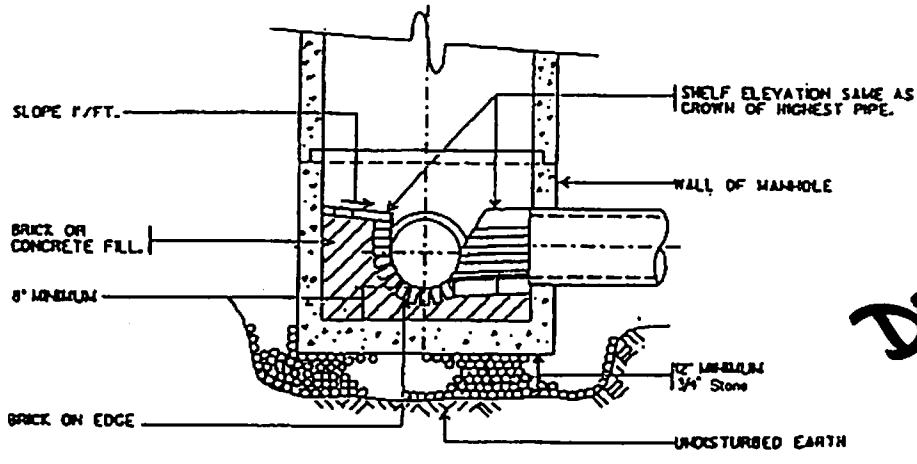

DO NOT COPY

Standard Precast Concrete Manhole

Town of Granby, MA
Planning Board
March 2005

CONCRETE BLOCK MANHOLES
MANHOLES OVER 9 FT. IN DEPTH

NOTE:
MANHOLE DESIGN SHOWN IS FOR PIPE DIAMETER OF 30 INCHES OR LESS

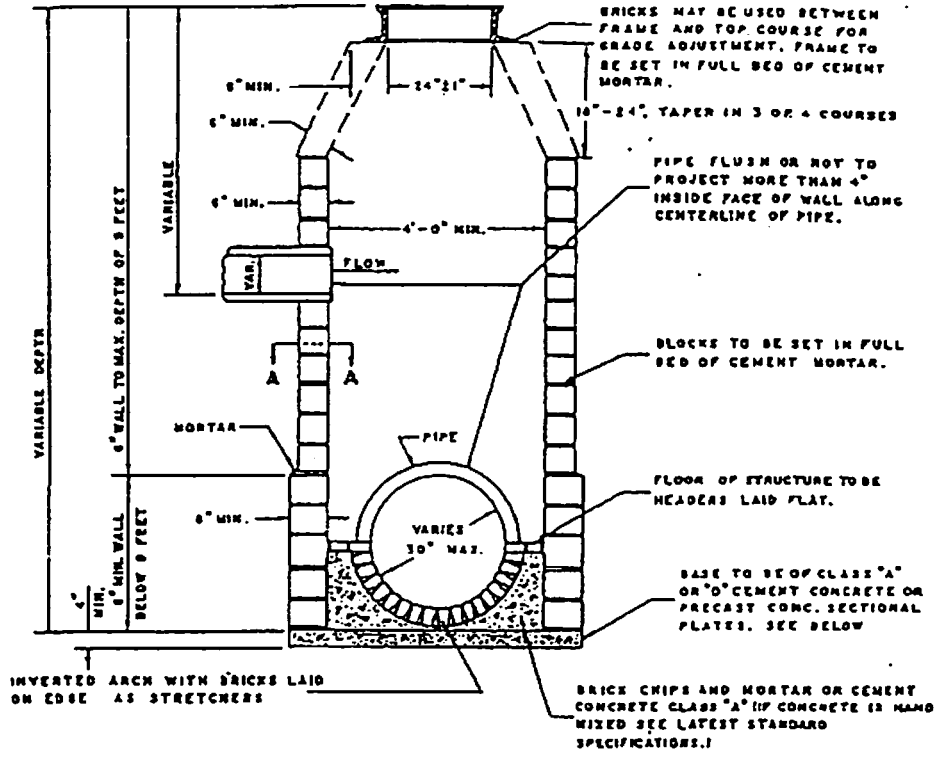

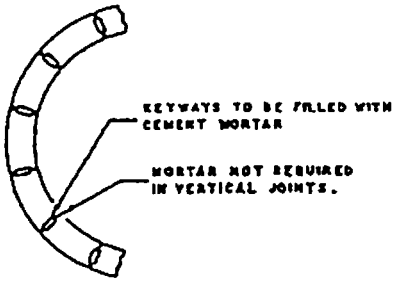

SECTION A-A

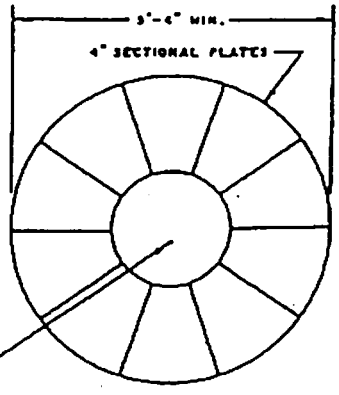

PLAN OF BASE

SOLID SECTION; OR FILL HOLE WITH BRICKS AND MORTAR; OR FILL WITH CLASS "A" OR "B" CONCRETE. (IF HAND MIXED SEE LATEST STANDARD SPECIFICATIONS

DO NOT COPY

Concrete Block Manhole
Over 9' Depth

Town of Granby, MA
Planning Board
March 2005

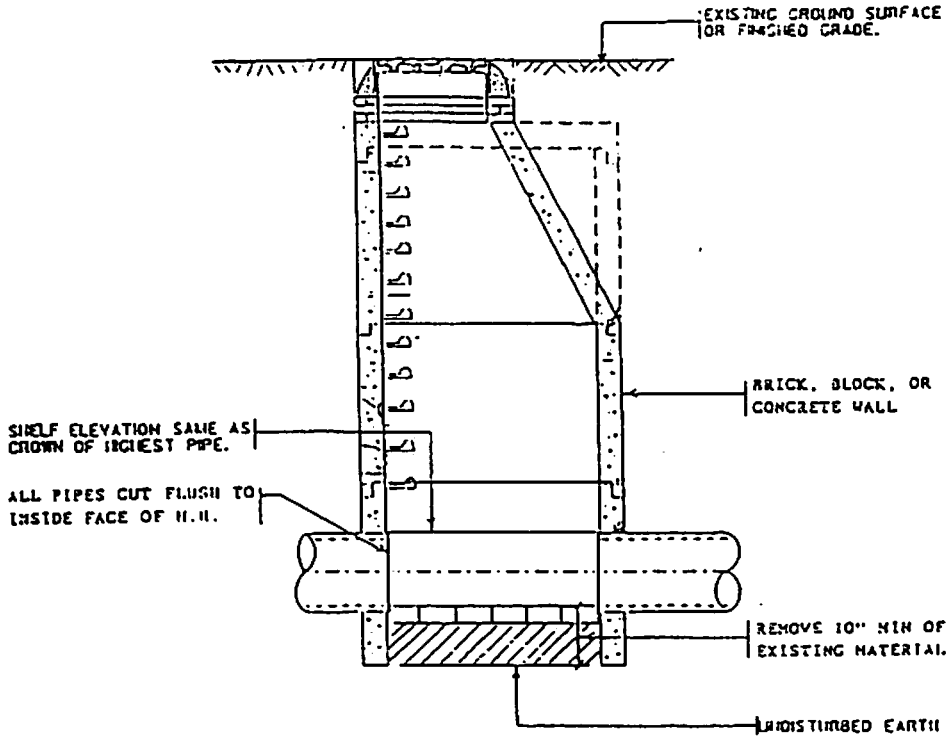

SECTION A-A

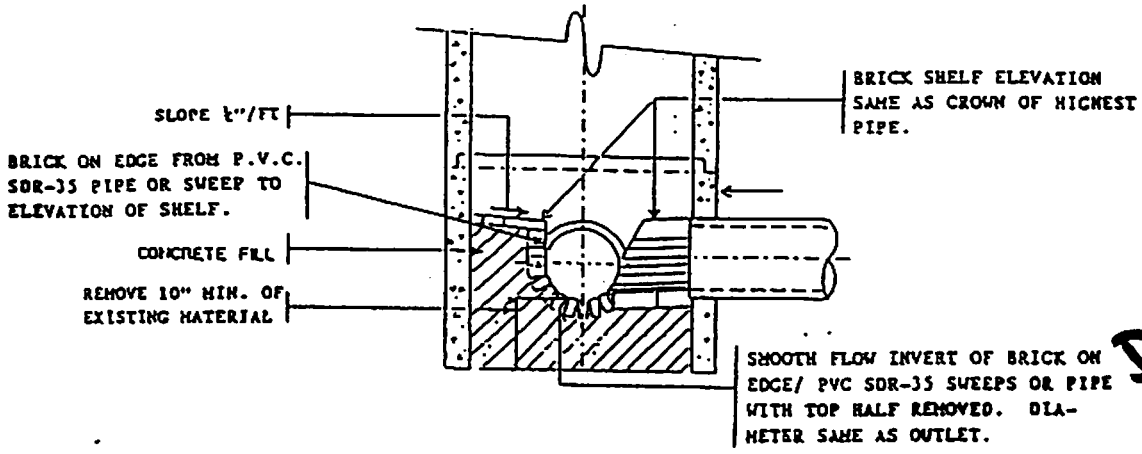

SECTION B-B

DO NOT COPY

NOTE:

1. PLUG ALL INFILTRATION FROM 6" ABOVE CROWN OF HIGHEST PIPE DOWN TO UNDISTURBED EARTH.
2. ALL PIPES CUT FLUSH TO INSIDE FACE OF M.H.
3. CLEAN WALLS OF M.H.'S TO ALLOW NEW CONCRETE FILL TO ADHERE PROPERLY

Sanitary Manhole
Invert Repair

Town of Granby, MA
Planning Board
March 2005

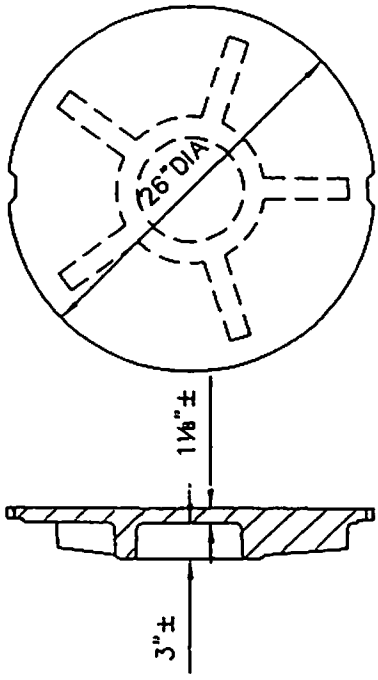

STANDARD MANHOLE COVER
MINIMUM WEIGHT: 200 LBS.

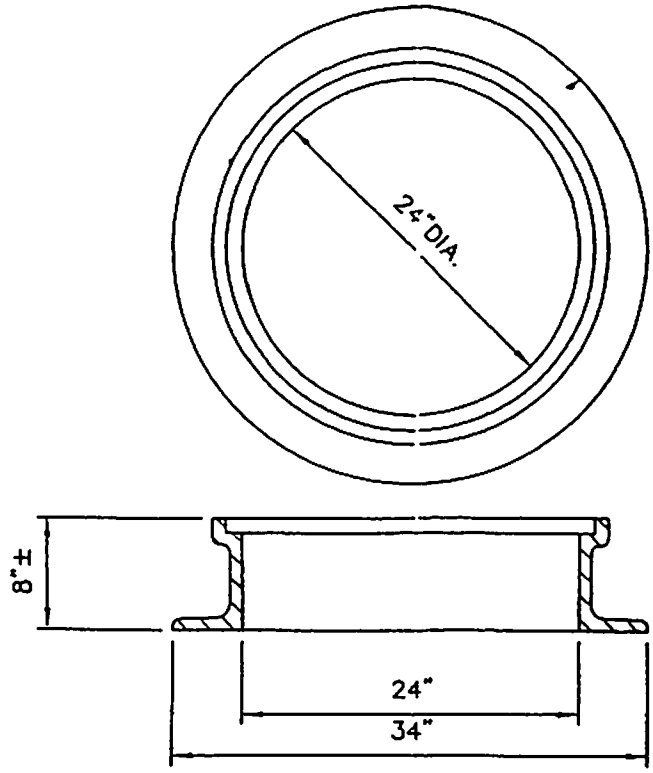

STANDARD MANHOLE FRAME
MINIMUM WEIGHT: 240 LBS.

NOTES:
1. FRAME AND COVER SHALL BE PROVIDED FROM THE SAME MANUFACTURER.

2. LETTERING SHALL BE CAST INTO COVERS AS SPECIFIED.

MANHOLE FRAME & COVER
NO SCALE

DO NOT COPY

Manhole Frame and Cover
Town of Granby, MA Planning Board March 2005

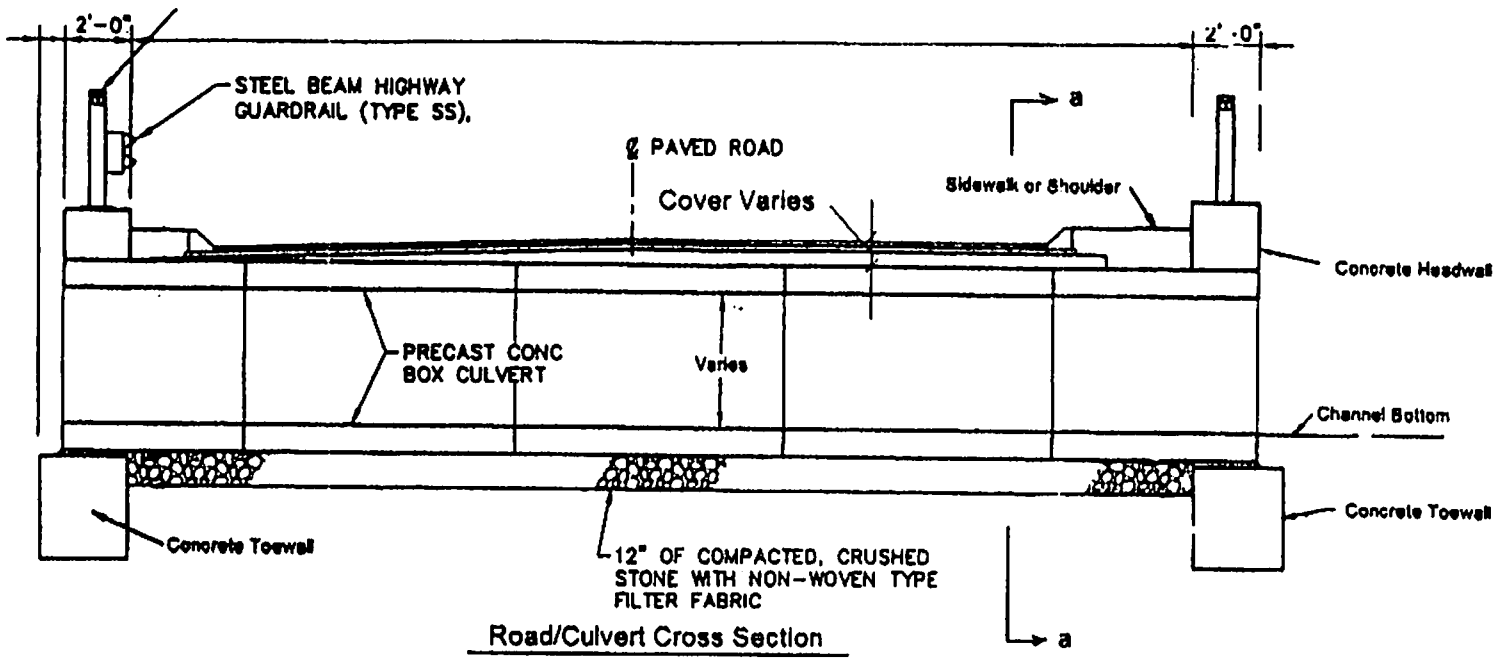

Road/Culvert Cross Section

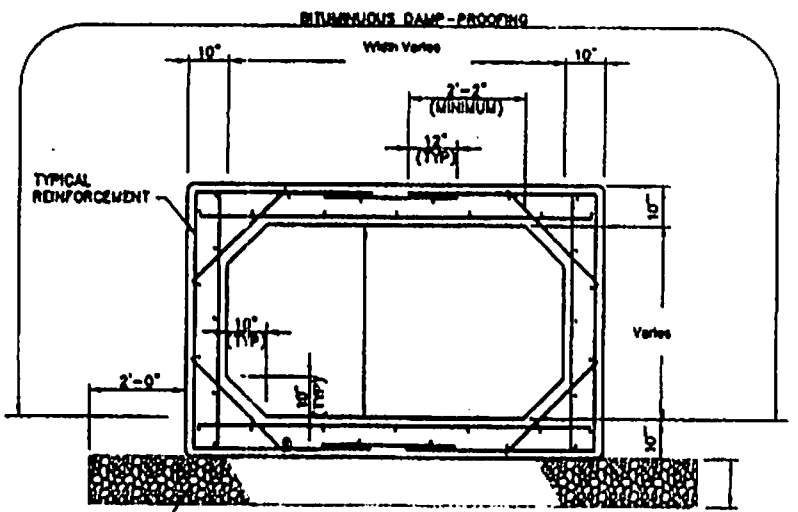

SECTION a-a

Concrete Box Culvert
Typical Structural Details

Town of Granby MA
Planning Board
March 2005

DO NOT COPY

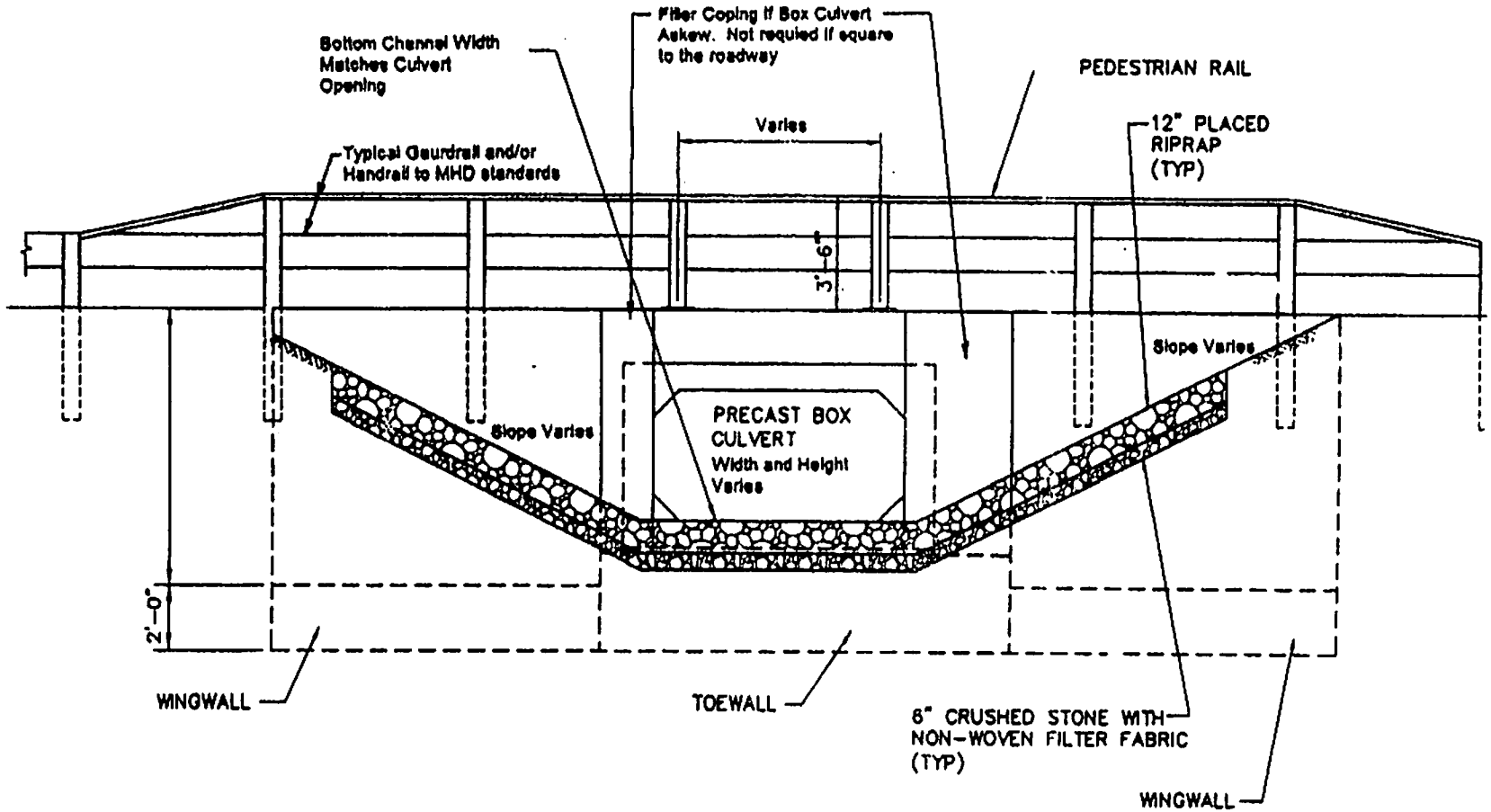

ELEVATION

Box Culvert
End Wall And
Channel Details

Town of Granby MA
Planning Board
March 2005

DO NOT COPY

CONCRETE AND FIELD STONE MASONRY ENDS FOR 8" TO 30" PIPE CULVERT

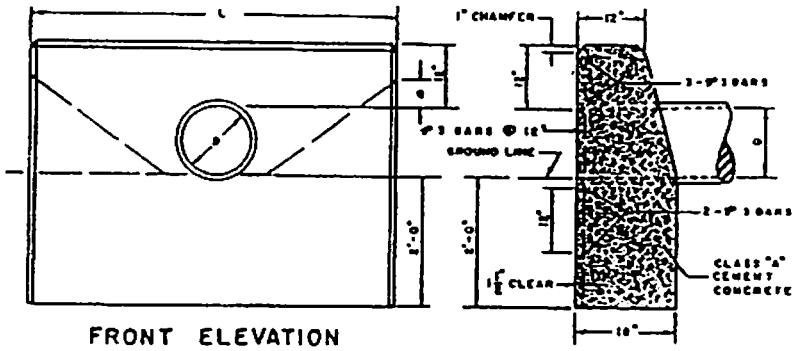

FRONT ELEVATION

END ELEVATION

TRENCH EXCAV. 1'-0" DEPTH	PIPE DIAM	1½:1 SLOPE			2:1 SLOPE			TRENCH EXCAV. 1'-0" DEPTH
CU. FT	D	L	CONC. 3000 P.S.I. CU. YDS	STEEL LBS.	L	CONC. 3000 P.S.I. CU. YDS	STEEL LBS.	CU. FT.
21.60	8"	4'-2"	0.77	15	5'-10"	1.08	21	27.40
23.91	10"	4'-10"	0.92	20	6'-8"	1.28	23	30.35
26.25	12"	5'-6"	1.08	21	7'-6"	1.49	29	33.25
29.75	15"	6'-6"	1.34	24	8'-9"	1.82	32	37.63
33.25	18"	7'-6"	1.61	30	10'-0"	2.18	39	42.00
37.35	21"	8'-6"	1.95	34	11'-6"	2.62	43	47.25
39.38	24"	9'-3"	2.16	35	12'-6"	2.97	50	50.75
43.75	30"	10'-6"	2.63	44	15'-0"	3.86	62	59.50
	D	4" FOR 1½:1 SLOPE						
		6" FOR 2:1 SLOPE						

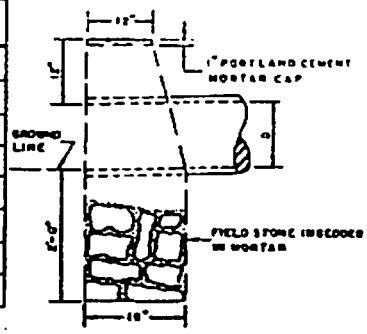

END ELEVATION

CONCRETE CRADLE FOR PIPE CULVERTS

NOTE:
1. FOR DESCRIPTIONS, MATERIALS AND CONSTRUCTION METHODS, SEE LATEST SPECIFICATIONS.
2. ALL CONCRETE DIMENSIONS SHOWN ARE MINIMUM.
3. PAYMENTS WILL BE BASED ON THE ACCOMPANYING TABLE.

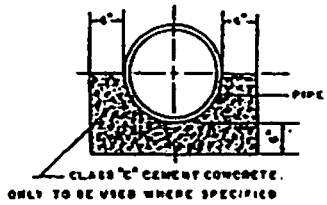

DO NOT COPY

Culvert Headwall

Town Of Granby
Planning Board
March 2205

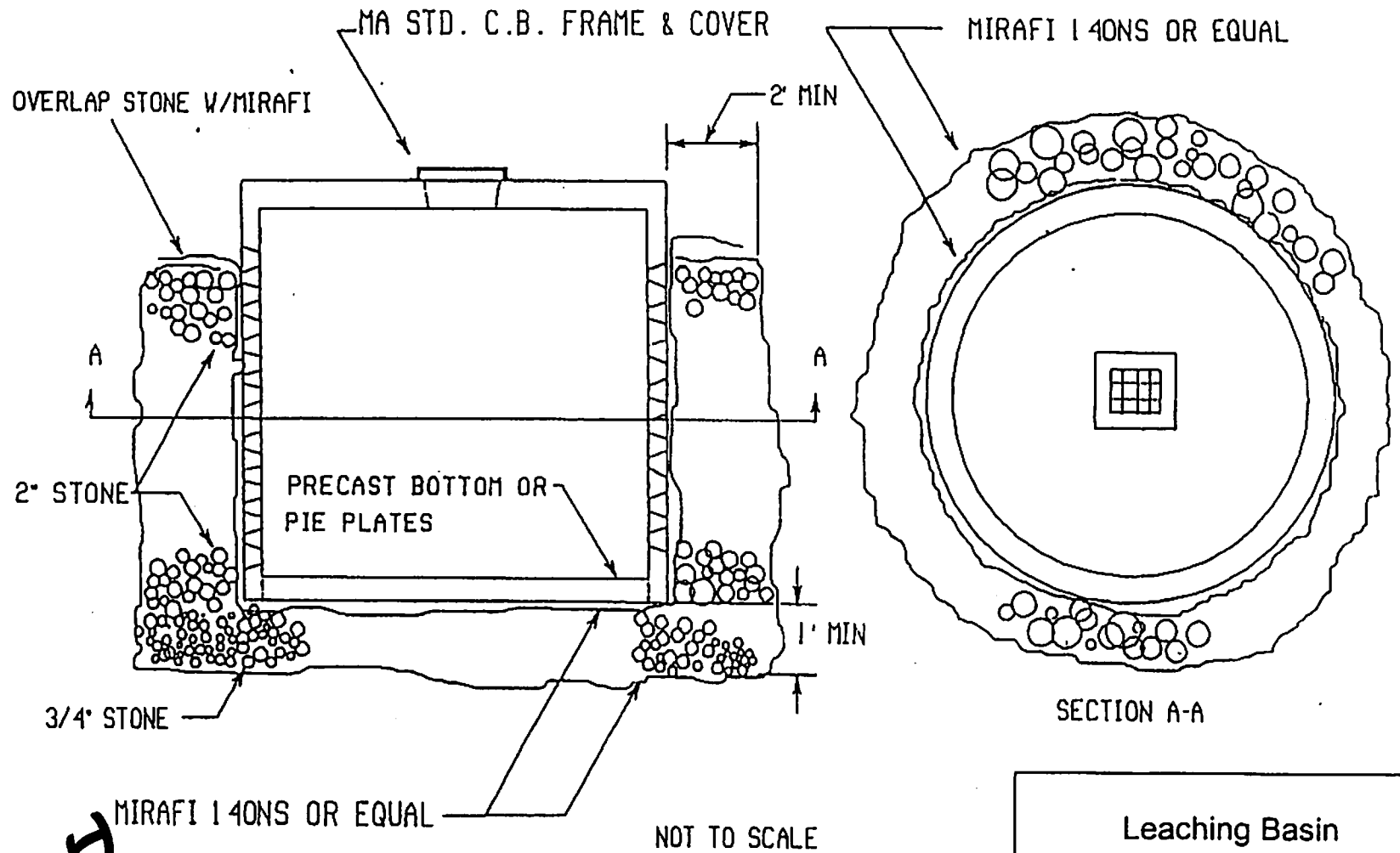

Leaching Basin

Town of Granby MA
Planning Board
March 2005

DO NOT COPY

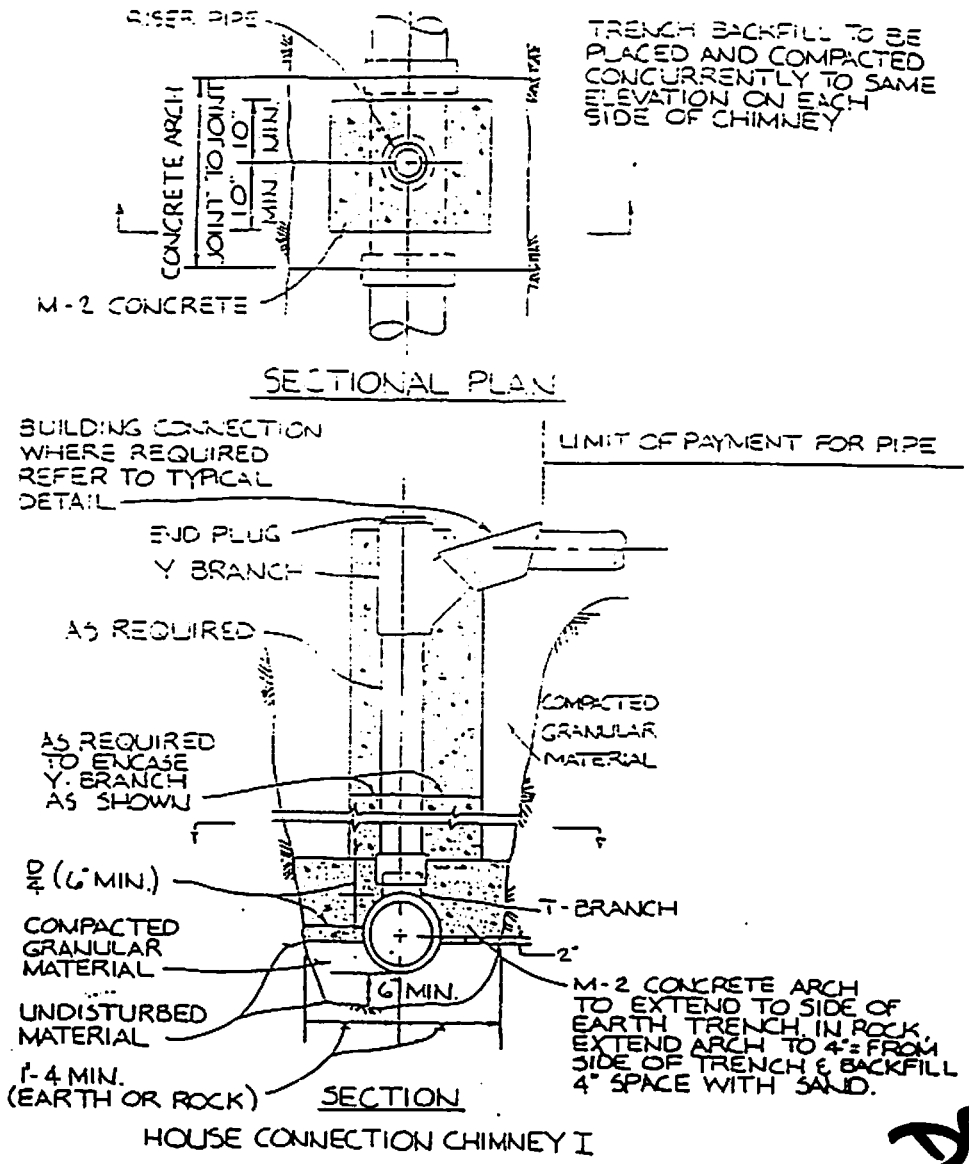

HOUSE CONNECTION CHIMNEY I

N.T.S.

DO NOT COPY

Sewer Service Chimney

Town of Granby, MA
Planning Board
March 2005

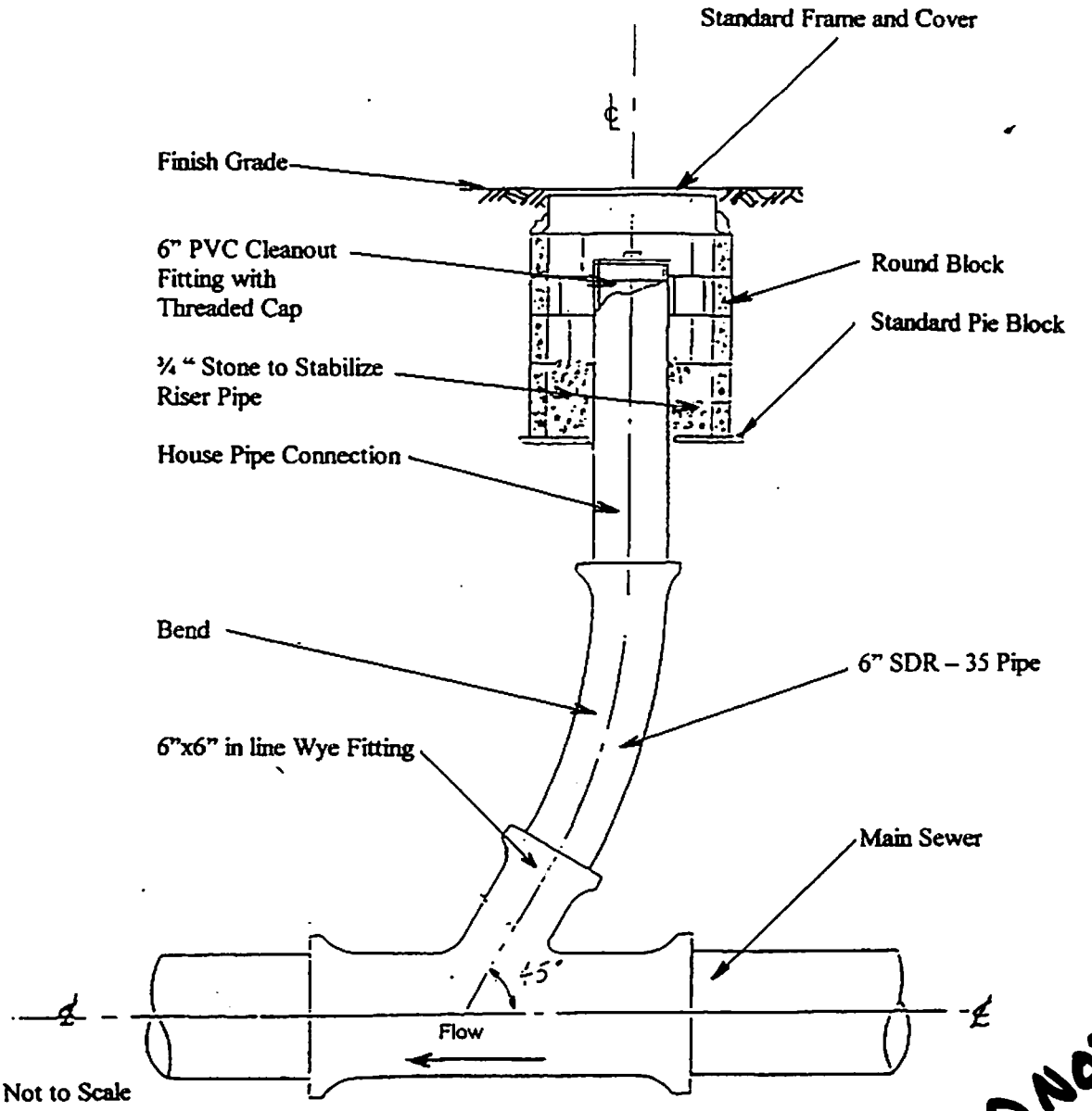

Note: **Minimum Pitch for house service connections = ¼" per foot**
Location of connection to be determined in the field by the engineer

DO NOT COPY

Sewer Pipe Cleanout

Town of Granby, MA
Planning Board
March 2005

STAMPED IDENTIFICATION	5% LIMIT	
	O.D.	C
D-3034 DR-35 15"	13.20	12.20
D-3034 DR-35 12"	10.79	9.79
D-3034 DR-35 10"	9.08	8.08
D-3034 DR-35 8"	7.28	6.28

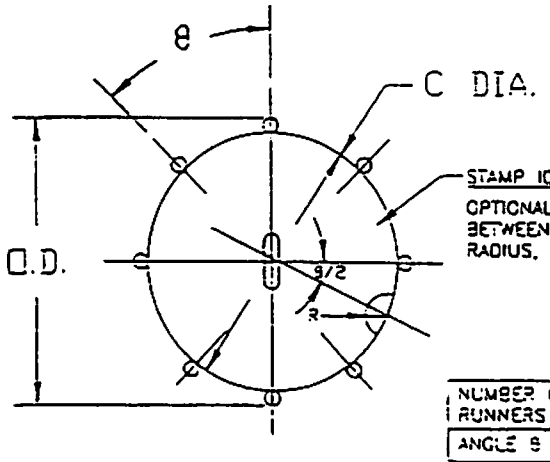

STAMP IDENTIFICATION ONE END TYP.

OPTIONAL-SCALLOPS.(CENTERED BETWEEN RUNNERS)
RADIUS, R=1" FOR 10",12" & 15" SIZE
R=3/4" FOR 8" SIZE
R=1/2" FOR 6" SIZE

NUMBER OF RUNNERS	7	8	9	10	11	12
ANGLE θ	51.4°	45°	40°	36°	32.7°	30°

NOTE: IF A SWIVEL CONNECTION IS DESIRED, USE A SWIVEL CUP ON THE PULL ROPE OR CABLE.

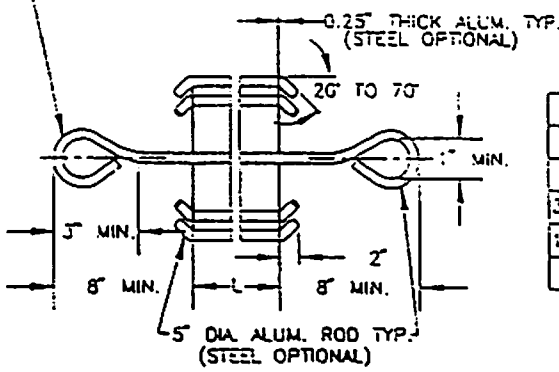

ALL DIMENSIONS IN INCHES

L MIN.-MAX.	OVERALL LENGTH OF RUNNER MATERIAL REQUIRED L+4"
4" TO 15"	
3-1/2" TO 12"	OVERALL LENGTH OF CENTER ROD MATERIAL REQUIRED L+26"
1-3/4" TO 10"	
1-1/4" TO 8"	

MANDREL DETAIL - FABRICATION & ASSEMBLY IN ACCORDANCE WITH ASTM D-3034 SEWER PIPE FOR DEFLECTION TESTING OF INSTALLED SEWER PIPE.

DO NOT COPY

Go-No-Go Gage Mandrel

Town of Granby, MA
Planning Board
March 2005

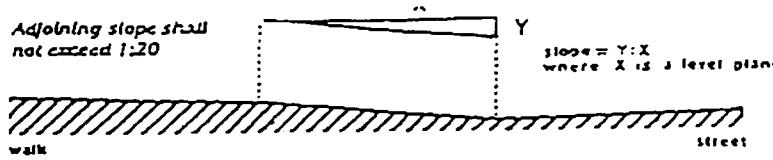

Fig. 11
Measurement of Curb Ramp Slopes

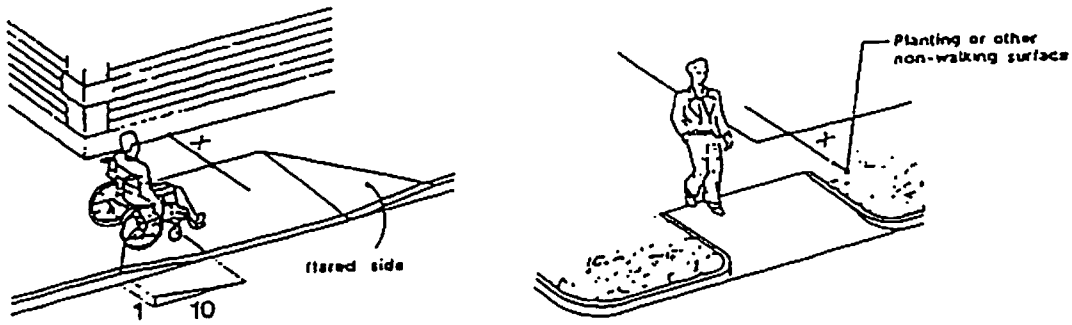

(a)
Flared Sides

(b)
Returned Curb

If X is less than 48 in. then the slope of the flared side shall not exceed 1:12.

Fig. 12
Sides of Curb Ramps

4.7.11 Islands. Any raised islands in crossings shall be cut through level with the street or have curb ramps at both sides and a level area at least 48 in (1220 mm) long between the curb ramps in the part of the island intersected by the crossings (see Fig. 15(a) and (b)).

4.8 Ramps.

4.8.1* General. Any part of an accessible route with a slope greater than 1:20 shall be considered a ramp and shall comply with 4.8.

4.8.2* Slope and Rise. The least possible slope shall be used for any ramp. The maximum slope of a ramp in new construction shall be 1:12. The maximum rise for any run shall be 30 in (760 mm) (see Fig. 16). Curb ramps and ramps to be constructed on existing sites or in existing buildings or facilities may have slopes and rises as *allowed in 4.1.6(3)(a)* if space limitations prohibit the use of a 1:12 slope or less.

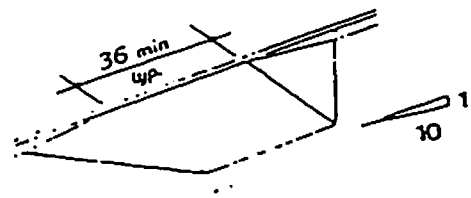

Fig. 13
Built-Up Curb Ramp

Handicapped Ramps

Town of Granby, MA
Planning Board
March 2005

DO NOT COPY

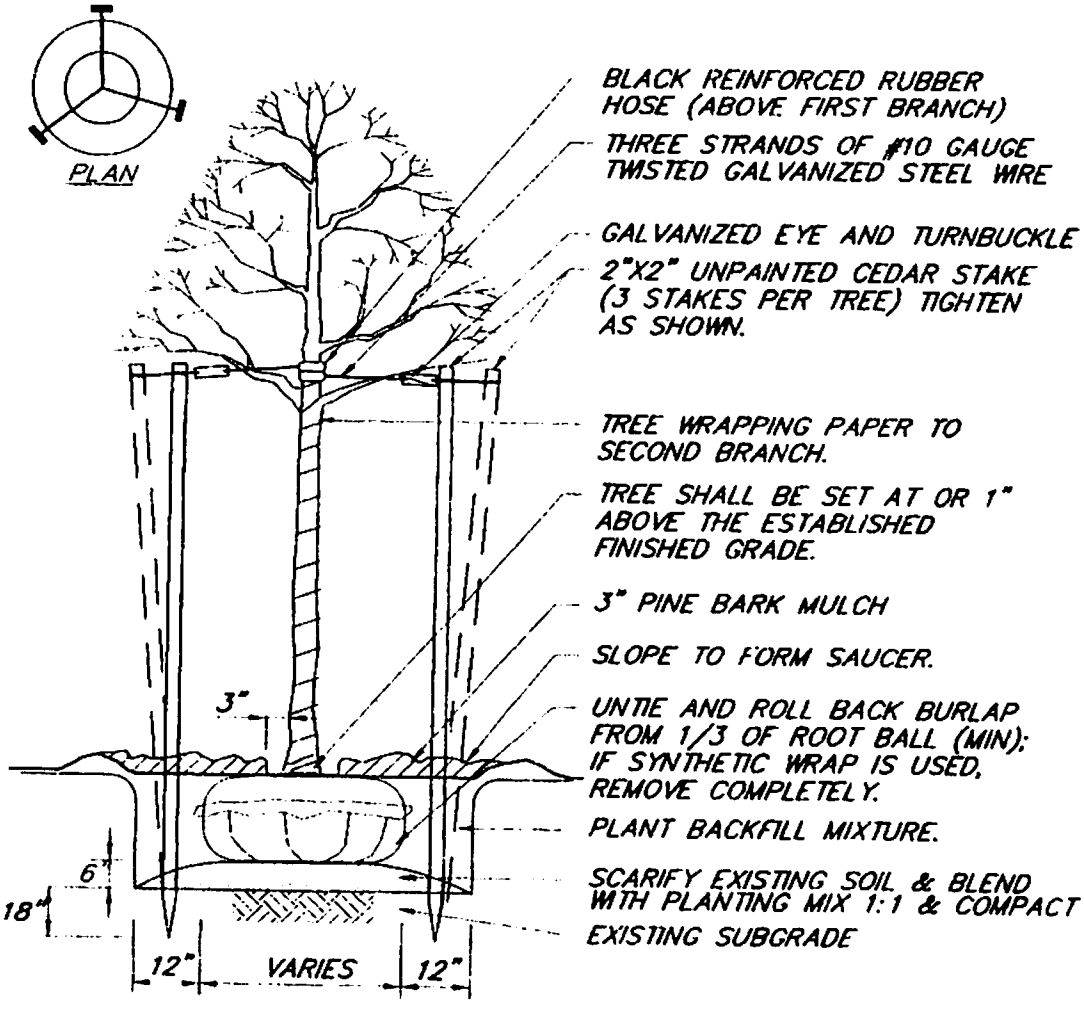

TREE PLANTING

NO SCALE

Do not COPY

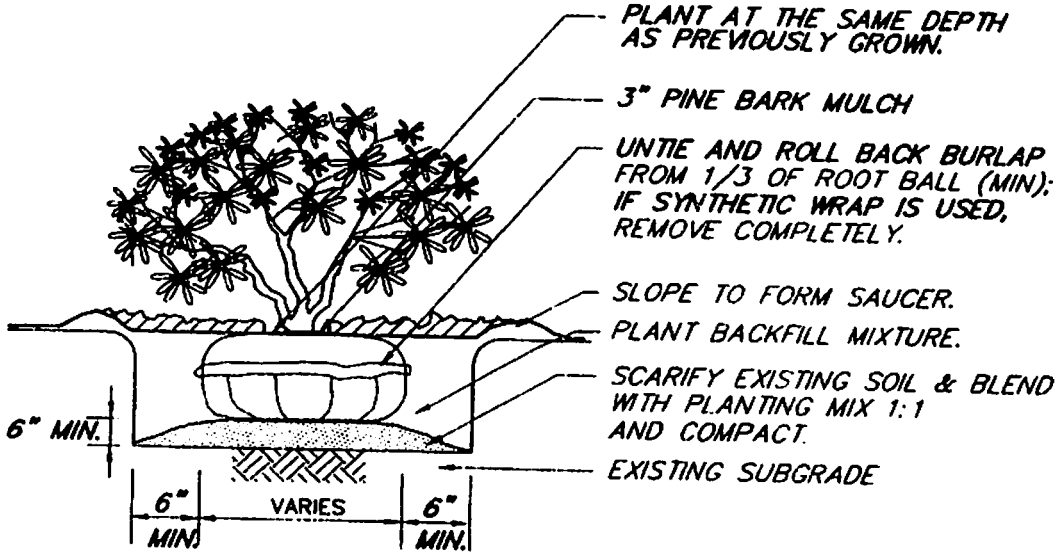

SHRUB PLANTING

NO SCALE

DO NOT COPY

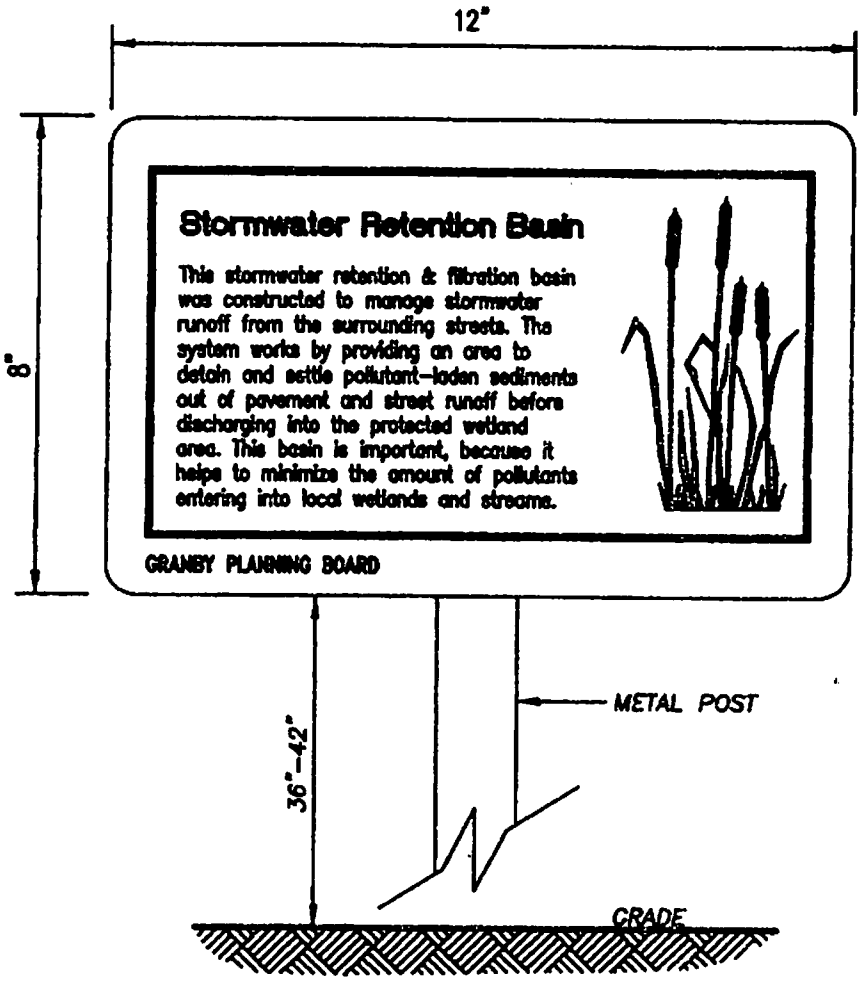

PROPOSED STORMWATER RETENTION BASIN SIGN

(NO SCALE)

DO NOT COPY

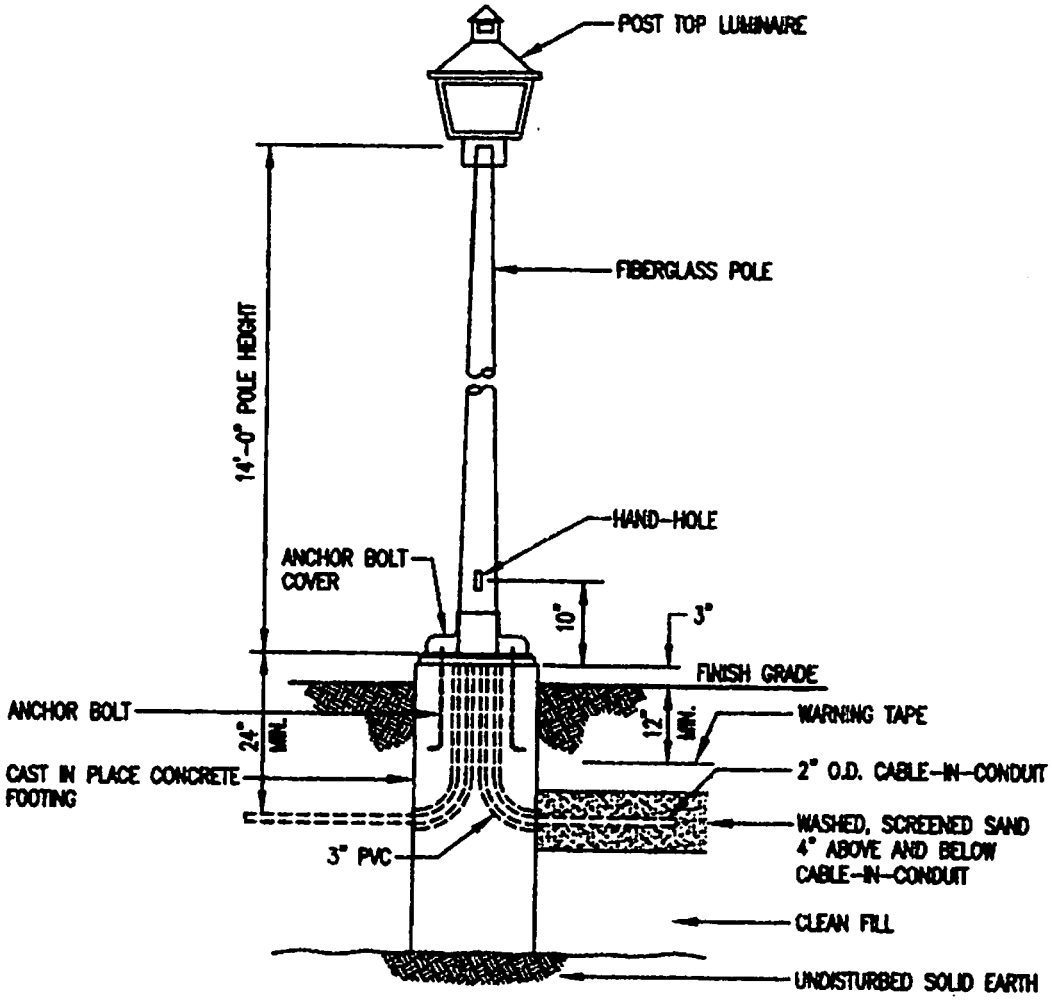

BASE MOUNTED 14 FOOT FIBERGLASS POLE WITH LIGHT – MODEL CS6810

(NOT TO SCALE)

Do not COPY

12/11/200

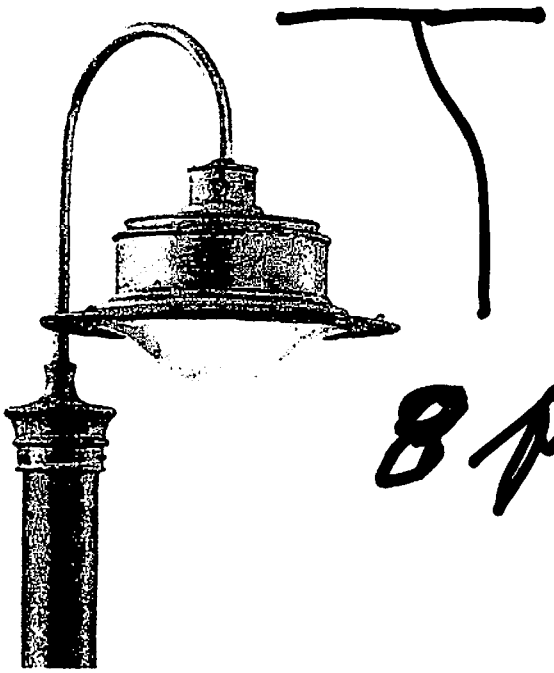

8 ft total height

4 total

ON sensors

TOWN OF GRANBY

PLANNING BOARD
250 STATE STREET
GRANBY, MA 01033
(413) 467-7177
FAX (413) 467-2080

GRANBY PLANNING BOARD

OCTOBER 2, 2006

Approved "Peer Reviewer" List for Engineering Review & Oversight

- **Analytical Engineering, Inc.**
  Consulting Engineers
  Principle= William A. Shaheen, PH.D, P.E.
  49 South Street
  P.O. Box 153
  Granby MA 01033-0153
  Tel # (413) 467-3141; Fax # (413) 467—9075
  E-mail: billshaheen@analytical-engineering.com
  Website: www.analytical-engineering.com

- **Doucet & Associated, Inc.**
  Consulting Engineers
  251 Northampton St., Suite B
  Easthampton MA 01027
  Tel # (413) 529-1142; Fax # (413) 529-1062

- **Sherman and Frydryk Land Surveying & Engineering**
  Principle= Donald J Frydryk, P.E., P.L. S.
  Depot Village Professional Building
  3 Converse Street, Suite 203
  Palmer, MA 01069
  Tel # (413) 289-6210; Fax # (413) 289-1025

- **Robert H LeMaitre, P.E., P.L.S.**
  Civil Engineer & Land Surveyor
  4 Skyview Drive
  Ware, MA 01082
  Tel # (413) 967-5885

- **Tighe & Bond**
  Consulting Engineers & Environmental Specialist
  53 Southampton Road
  Westfield, MA 01085
  Tel # (413) 562-1600; Fax # (413) 562-5317
  E-mail: info@tighebond.com
  Website: www.tighebond.com

TOWN OF GRANBY

PLANNING BOARD
250 STATE STREET
GRANBY, MA 01033
(413) 467-7177
FAX (413) 467-2080

- **VHB-Vanasse Hangen Brustlin, Inc.**
  Transportation-Land Development-Environmental Services
  505 East Columbus Avenue
  Springfield MA 01105
  Tel # (413) 747-7113; Fax # (413) 747-0916

- **Heritage Surveys, Inc.**
  241 College Highway & Clark Street
  Post Office Box 1
  Southampton MA 01085-0001
  Tel # (413) 527-3600; Fax # (413) 527-8280
  E-mail: bruce@heritagesurveys.com
  Website: www.heritagesurveys.com

- **The Berkshire Design Group**
  4 Allen Place
  Northampton MA 01060
  Tel # (413) 582-7000; Fax # (413) 582-7005
  E-mail: bdg@berkshiredesign.com
  Website: www.berkshiredesign.com